THE BIKE STORAGE COMPANY

Fabricating High-Quality,
Cost-Effective Bike Storage,
Made in Britain.



SECURED BY DESIGN GAS-ASSISTED TWO TIER CYCLE RACK

Sold Secure Silver Certified and Police Preferred Specification Approved

The Secured by Design Gas Assisted Two Tier Cycle Rack is the specification-ready choice for projects where independently accredited, high-capacity cycle parking with assisted lower-tier operation is a planning requirement or client brief. Built on a robust steel framework with reinforced locking hoops, an extended outer rail and non-returnable security fixings to the gas strut and pin, it carries Sold Secure Silver accreditation and Police Preferred Specification status under the official Secured by Design initiative. Independently tested against defined tool attack, it provides a clear, auditable compliance route for architects and specifiers working to SBD guidelines or local planning conditions. Two locking hoops welded together to create a 10mm thick plate, increased material thickness to end caps, a 5mm rear end cap, a reduced and extended outer rail and security fixings with armour rings.

- **Sold Secure Silver Accreditation:** Independently tested and certified against defined tool attack, providing documented evidence of attack resistance and a clear compliance route for SBD
- **10mm Plate Locking Hoops:** Two locking hoops welded together to create a 10mm thick plate, increasing resistance to lever and forced-separation attack at the head of the rack
- **Extended Outer Rail:** The outer rail is extended and the gap between outer and inner reduced, eliminating a tool insertion point and increasing structural integrity across the assembly
- **Security Fixings with Armour Ring Caps:** Applied to all fixing points to prevent bolt removal and resist ground-level displacement throughout
- **5mm Rear End Cap:** Increased material thickness to the rear end cap and locking hoop
- **Made-in-Britain:** Backed by a 10-year warranty

ISO 9001 ISOQAR · ISO 14001 ISOQAR · ISO 45001 ISOQAR · Constructionline Gold Member · MADE IN BRITAIN · NBS · BREEAM · SpecifiedBy

THE BIKE STORAGE COMPANY

Fabricating High-Quality,
Cost-Effective Bike Storage,
Made in Britain.

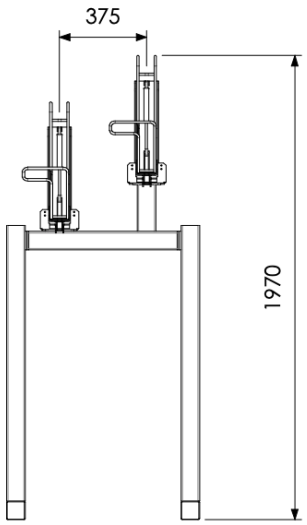

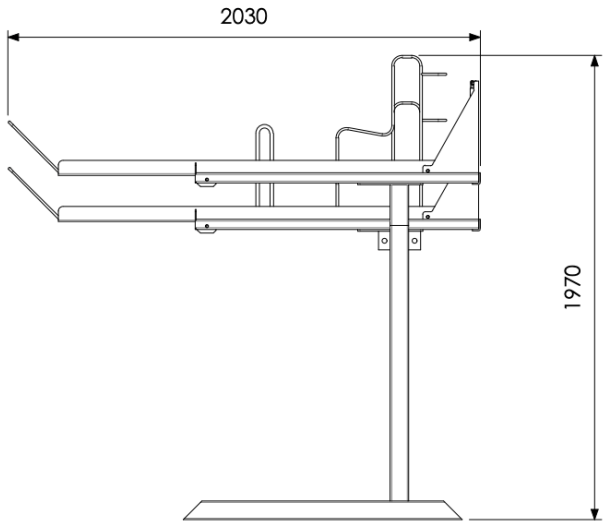

Standard dimensions - contact us for bespoke dimensions

SECURED BY DESIGN GAS-ASSISTED TWO TIER CYCLE STAND

A security-certified gas assisted two tier cycle rack for projects where independently accredited, space-efficient cycle parking is required. Sold Secure Silver rated and Police Preferred Specification approved under Secured by Design, with reinforced 10mm plate locking hoops, an extended outer rail with reduced gap, non-returnable security fixings to the gas strut and pin, and security fixings with

Customisation that Works for You

Every site is different which is why this stad is built to adapt:

- 375mm depth per tier; 2030mm width; 1970mm height
- Galvanised mild steel framework, hot-dipped to BS EN ISO 1461:2022
- 2No. locking hoops welded to 10mm thick plate for reinforced attack resistance
- Extended outer rail with reduced gap between outer and inner rail
- Non-returnable security fixings to gas strut and pin



Lead Times

2 - 3 Weeks

**For updated and expedited lead times, please contact us*

Need help with installation?
We offer a full installation service
hello@thebikestoragecompany.co.uk

DOWNLOADS
LIBRARY

For more information on our product specifications, colours and finishes view our product downloads library online.

ACHIEVE BREEAM
ACCREDITATION

BRITISH MADE
PRODUCTS



0800 246 1723

www.thebikestoragecompany.co.uk

hello@thebikestoragecompany.co.uk

107 - 108 Harbour Yard, London, SW10 0XD