Secured by Design Gas Assisted Two Tier Cycle Rack (Silver)

FOLDED LOCKING HOOP U (1:5)

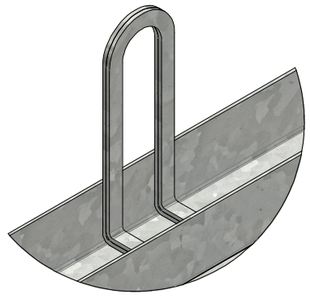

WELDED TO BASE OF INNER V (1:4)

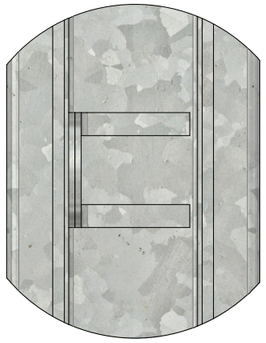

NEW GAS STRUT AND PIN FIXINGS AA (1:8)

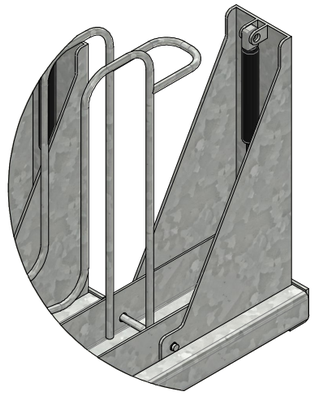

RETAIN NYLON BLOCKS AND EXTEND OUTER W (1:4)

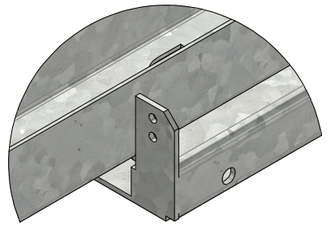

IMPROVED END PLATE Y (1:4)

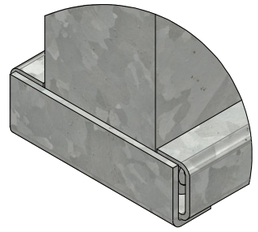

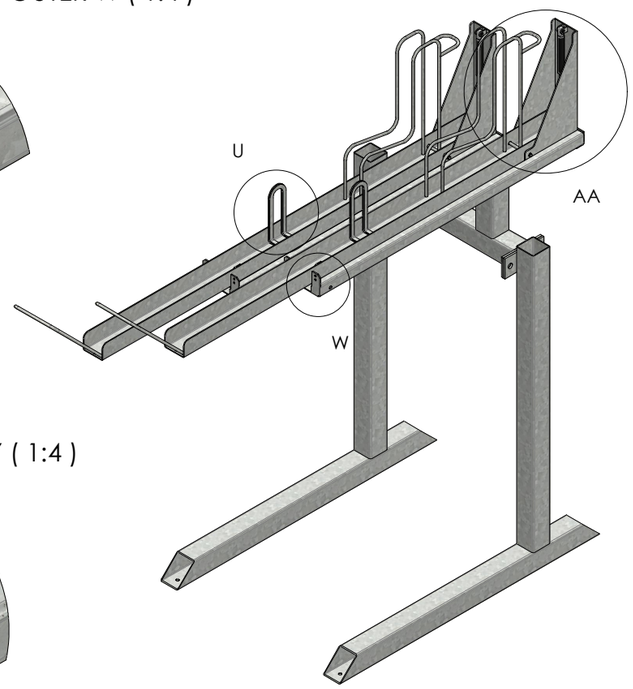

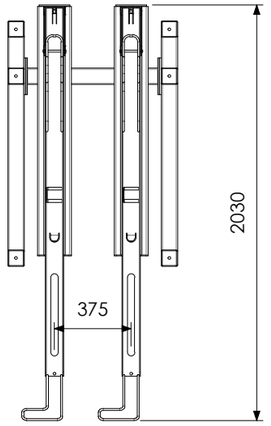

Key Features:

- Increased security of locking hoop - 2No. Locking hoops welded together to create 10mm thick plate
- Increased material thickness to locking hoops and end caps
- Reducing gap and extending outer
- 5mm Rear end cap
- Non-returnable security fixings to gas strut and pin
- Security fixings and armour rings to all fixings

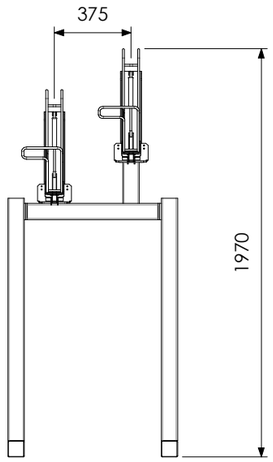

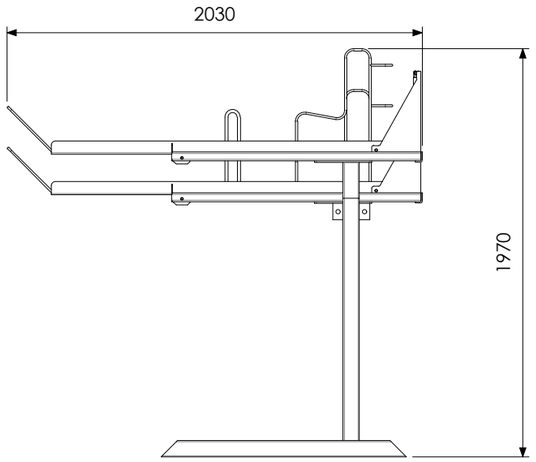

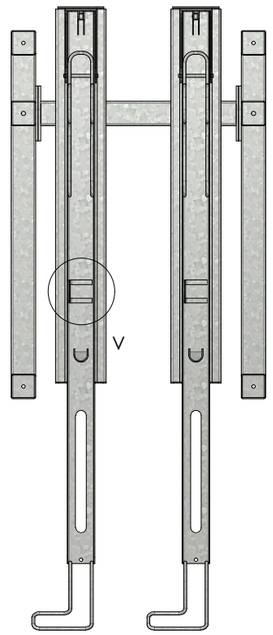

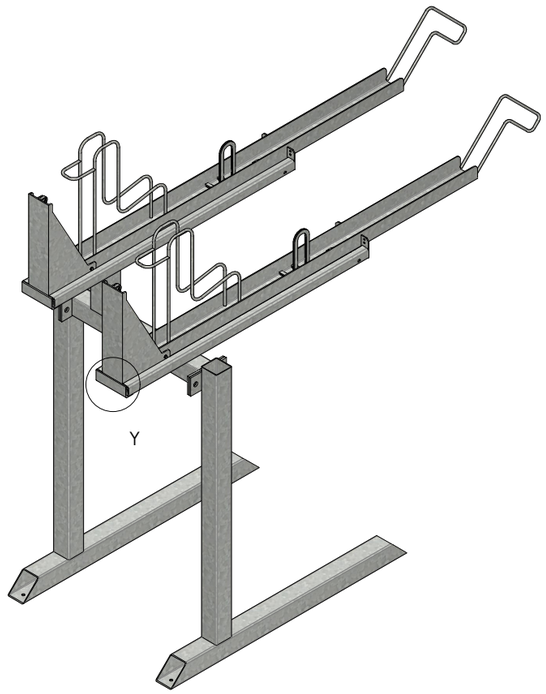

NOTES	TOLERANCES		CREATED BY	CREATION DATE	REVISION	TITLE	SCALE
	• LINEAR TOLERANCES ± 1MM • ANGULAR TOLERANCES ± 0.5° ALL DIMENSIONS IN MM UNLESS STATED	THE BIKE STORAGE COMPANY 0800 246 1723	W Martin	21/04/2026	01	TBSC_GTT_SBD_DR_01-1	1 : 20
	THIS DRAWING IS CONFIDENTIAL AND IS THE PROPERTY OF THE BIKE STORAGE COMPANY IT MUST NOT BE COPIED OR DISCLOSED TO A THIRD PARTY WITHOUT PERMISSION.	THIRD ANGLE PROJECTION				PROJECT Secured By Design	SHEET 1
	THE BIKE STORAGE COMPANY, MARINA STUDIOS, HARBOUR YARD, LONDON, SW10 0XD HELLO@THEBIKESTORAGECOMPANY.CO.UK					CLIENT The Bike Storage Company	STATUS Manufacture
							SHEET SIZE A3